# Measuring Guidelines for TributeNight Arm Garments

## Positioning Your Client When Measuring for Arm Garments

TributeNight garments are most commonly worn while the client is sleeping, therefore, take the measurements with the client in supine position, if possible. Indicate on the order form which measuring position you chose.

### Measuring Lengths:

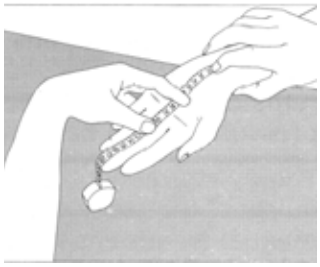

With the client in supine position, the arm lying next to the trunk, measure the length of the limb. Use a water based marker to indicate the length reference point on the skin according to the following suggested procedure:

**A to B length:** Measure with palm up, from the digit crease (MCP) to the fingertip of the third digit (middle finger).

**B to C length:** With the palm up, position the tape measure with zero at the wrist crease; measure the length to the base of the third digit (MCP of middle finger).

**C to D length:** With the tape measure placed with zero (0) at the wrist crease, measure the length to the D point (typically the largest girth point of the forearm). Using a water based marker dot this point of the arm.

**C to E length:** Continue to measure from the wrist C to the medial elbow crease E with the elbow in slight flexion (10° to 20°). Using a water based marker dot this point of the arm.

**C to F length:** Measure from the wrist to the F point (typically the largest girth point of the upper arm). Dot this point with a water based marker.

**C to G length:** Measure from the wrist to the axilla. (Place a pencil or dowel in the armpit as a visual guide.) Abducting the arm during this length measurement will result in a garment that is too long. Measuring with shoulder flexion will result in a garment that is too short.

**G to H length:** The standard lateral shoulder cap is 10cm longer than the medial length. To customize this length and for I length garments, measure from lateral G to AC joint.

**H to I length:** Measure from AC joint to high point shoulder (HPS) or base of neck for I length garments.

### Measuring Circumference:

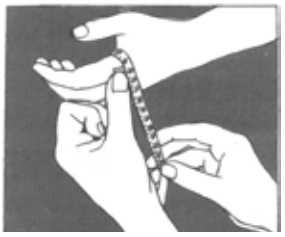

Note: Record all circumference measurements on the left side of the measuring chart on the Arm Order Form.

**B:** Measure the circumference of the palm across the MCP's with the hand in NEUTRAL posture, simulating the posture of the hand when a person is sleeping.

**C:** Measure the circumference of the wrist over the styloids.

**D:** Measure the circumference of the forearm where you have dotted the skin.

**E:** Measure the girth with the elbow in slight flexion (10° to 20°). Use the medial elbow crease and mid-olecranon process as your reference points.

**F:** Measure the circumference of the upper arm at the marker dot. If the arm tends to be fleshy, you have the option of recording the girth as a range. Record the girth measurement with the tape pulled taut and the girth measurement with the tape measure laid on the tissue (i.e. 36 cm to 39 cm).

**G:** Measure the girth at the level of the axilla, STRAIGHT ACROSS. Be careful not to angle the tape measure proximally on the lateral side of the arm.

**H:** Measure diagonal girth from anterior AC around the torso to posterior AC.

## Customized Modifications for TributeNight Arm Garments

**MO-ZP:** Zipper is placed from the thenar eminence to mid-bicep The garment is closed at the proximal and distal end to make it easier for the client to zip the garment closed.
**MO-DS:** Digit Spacers similar to the ones used in TributeNight glove units will be added to the UE-AG garments. Complete both the Hand Order Form and the Arm Order Form when ordering this modification.
**MO-PL:** Pull-up Loops may be added to the volar surface of the arm unit.
**MO-AP / MO-VC:** Use the Comments Section to indicate the starting and ending points of the Velcro modifications.
**UE-OJ:** An Outer Jacket will be custom made to cover the garment, applying additional compression. An option of snap or Velcro fastener is available.
**UE-VCJ:** Variable Compression Jackets allows therapist to adjust compression laterally. Zipper opening on medial aspect allows ease of use.

Body Works Compression
Call: (571) 232-3179
Fax: (703) 852-4371
Email: nancy@bodyworks-compression.com

# **TributeNight** Arm Order Form

***Please Measure in Centimeters***

**C = Circumference** **L = Length**

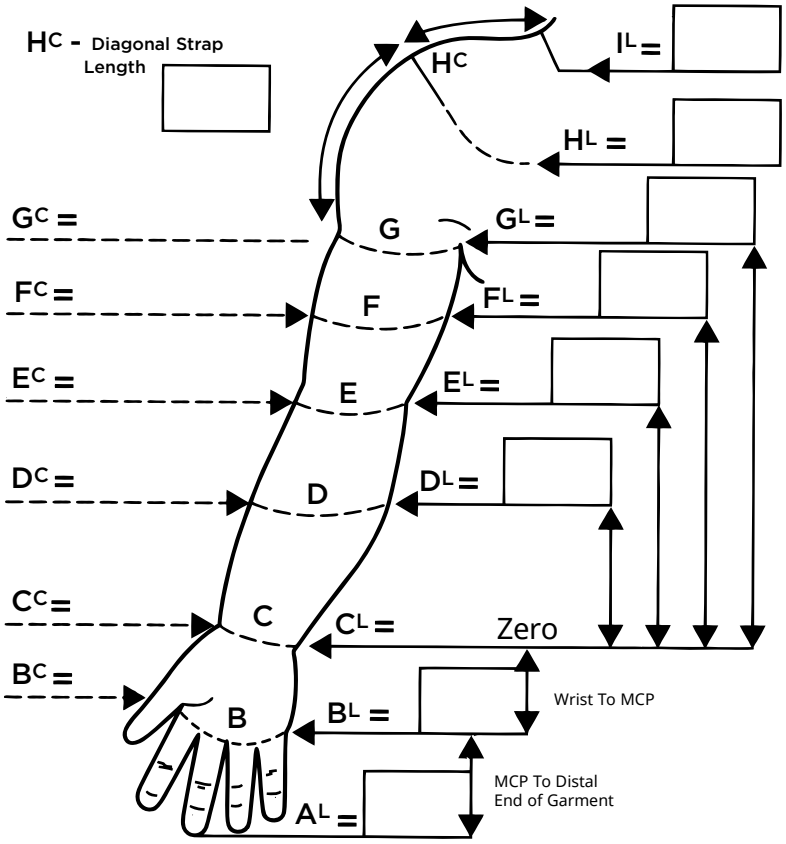


**SHIP TO:**
**Attn:**
**Street:**
**City:**
**State:** **Zip:**
**Telephone:**
**Fax:**
**E-Mail for Shipping Notification:**

**BILL TO:**
**Attn:**
**Street:**
**City:**
**State:** **Zip:**
**Telephone:**
**Fax:**

**Account #**_____
☐ **PO #**_____
☐ **CC #**_____ **Exp**___ /____

**If we have a question, whom should we contact?**

**Contact Phone #:**

**Client Name or Order Reference #:**

**DX** ☐**457.1** ☐**457.0** ☐**Other** _____

**Age**_____ **Height**_____ **Weight** _____

**For Solaris Internal Usage:**

☐ **SUPINE** ☐ **STANDING** ☐ **LEFT** ☐ **RIGHT**

| QTY | UNIT | PRICE |
|---|---|---|
| | **Garment Code: UE-** | |
| | **Outer Jacket** Fastener: ☐Snap ☐Velcro | |
| | **Variable Compression Jacket** | |
| | **Zipper** (on TributeNight only) | |
| | **Velcro** ☐MO-AP ☐MO-VC | |
| | **Digit Spacers** (include hand order form) | |
| | **Pull Up Loops** (on TributeNight only) | |
| | **Easy Slide Application Aid** | |
| | **Priority Production Fee** | |
| **Fabric Color** | **TributeNight:** ☐Black ☐Blue ☐Maroon ☐Pink ☐Teal<br>**Outer Jacket:** ☐Black ☐Blue ☐Maroon ☐Pink ☐Teal | |
| **Shipping** | ☐Bus. GRD ☐Res. GRD ☐2nd Day ☐Overnight | |
| | **TOTAL:** | |

**Comments:**_____